EVlink Home Anti-tripping Module for single phase installation EVA1HPC1 - EVA2HPC1

en **User manual**

JYT9298700-02_EN

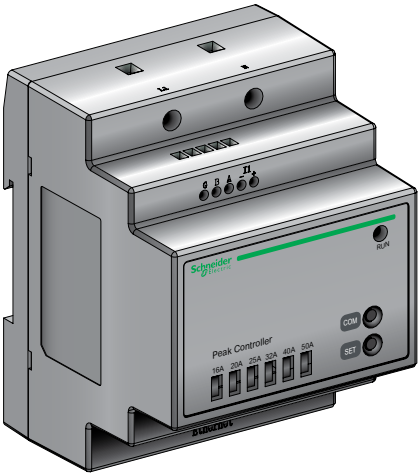

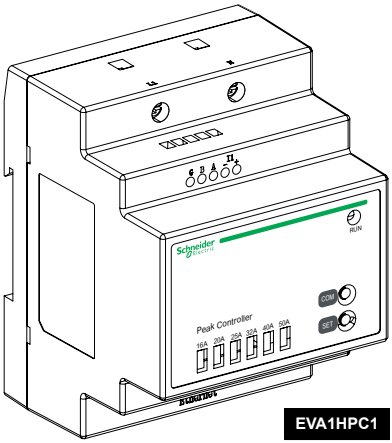

EVA1HPC1

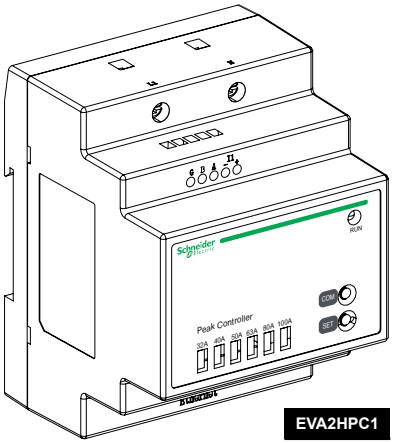

EVA2HPC1

Customer Care Center

Safety

The information provided in this documentation contains general descriptions and/or technical characteristics of the performance of the products contained herein. This documentation is not intended as a substitute for and is not to be used for determining suitability or reliability of these products for specific user applications.
It is the duty of any such user or integrator to perform the appropriate and complete risk analysis, evaluation and testing of the products with respect to the relevant specific application or use thereof. Neither Schneider Electric nor any of its affiliates or subsidiaries shall be responsible or liable for misuse of the information contained herein. If you have any suggestions for improvements or amendments or have found errors in this publication, please notify us.

You agree not to reproduce, other than for your own personal, non-commercial use, all or part of this document on any medium whatsoever without permission of Schneider Electric, given in writing. You also agree not to establish any hypertext links to this document or its content. Schneider Electric does not grant any right or license for the personal and noncommercial use of the document or its content, except for a non-exclusive license to consult it on an "as is" basis, at your own risk. All other rights are reserved.

All pertinent state, regional, and local safety regulations must be observed when installing and using this product. For reasons of safety and to help ensure compliance with documented system data, only the manufacturer should perform repairs to components.

When devices are used for applications with technical safety requirements, the relevant instructions must be followed.

Failure to use Schneider Electric software or approved software with our hardware products may result in injury, harm, or improper operating results.

Failure to observe this information can result in injury or equipment damage.

Safety

⚠ DANGER

DANGER indicates a hazardous situation which, if not avoided, **will result** in death or serious injury.

⚠ WARNING

WARNING indicates a hazardous situation which, if not avoided, **could result** in death or serious injury.

⚠ CAUTION

CAUTION indicates a hazardous situation which, if not avoided, **could result** in minor or moderate injury.

NOTICE

NOTICE is used to address practices not related to physical injury.

1 Contents

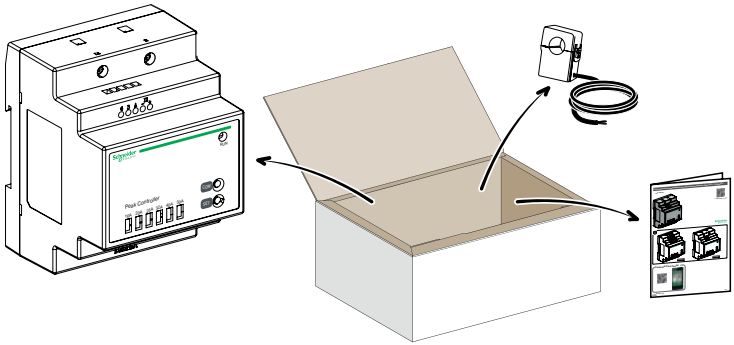

NOTE

Above picture with **EVA1HPC1** as example, it applies to both references **EVA1HPC1** and **EVA2HPC1**.

2 Description

2.1 Specified use

⚠ WARNING

The following points should be followed
This Anti-tripping module is designed for use with the EVlink Home charging station. Do not use with other electrical devices.
Failure to follow these instructions can result in death, serious injury, or equipment damage.

■ The Anti-Tripping Module limits the maximum power draw of the EVlink Home charging station to ensure the continuity of the electrical distribution under all conditions.
■ The Anti-Tripping Module senses the total current drawn by the local installation and, depending on the Maximum Current threshold set by the user, reduces the current drawn by the EVlink Home charging station.
■ When installing and connecting the Anti-tripping module, ensure that you comply with the requirements of various countries.

2.2 About this manual

■ This instruction sheet applies to the **single**-phase Anti-Tripping Module for the **single**-phase EVlink Home charging station only.
■ This instruction sheet is written for electricians and customers.

2.3 Dimension and weight

Anti-tripping module	
Dimension (W/H/D)	70 x 93 x 69 mm *(2.87 x 3.66 x 2.71 in)*
Compatibility	4 modules wide
Weight	196 g *(0.43 lb)*
Mounting type	DIN rail

Current sensor	
Dimension (W/H/D)	48 x 30 x 32 mm *(1.88 x 1.18 x 1.25 in)*
Sensor cable	50 cm *(19.68 in)* long with 1.2 mm² *(0.0018 in²)* diameter wires

2.4 Description

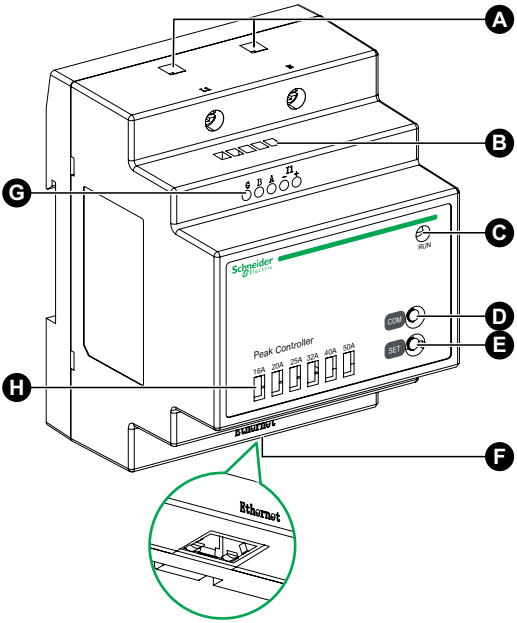

A	Power supply terminals	L1 connects to the Live cable and N connects to the Neutral cable.
B	Current sensor terminals	I1- and I1+ connect to the black and red wires of current transformer.
C	Module's status indicator	Green constant: Communicating with EV charger via PLC (Power Line Communication).
		Green flashing: no communication with EV Charger. Press D button to enable PLC communication.
		Red constant: Fault. Module is unable to communicate with the charging station.
D	Communication mode switch	Switches communication mode between PLC and RS-485 (currently unsupported).
E	Maximum current limiter	Limits the maximum current by cycling through various current thresholds.
F	Ethernet port	Unsupported.
G	Monitoring terminals	Enables RS-485 monitoring (currently unsupported).
H	Current threshold indicator	Indicates which current threshold has been set via Maximum current limiter (E).

NOTE

Above picture with **EVA1HPC1** as example, it applies to both references **EVA1HPC1** and **EVA2HPC1**.

3 Characteristics

3.1 General data

- Electrical Characteristics
  - Supply voltage: 220/230 V AC
  - Frequency: 50/60 Hz
  - Rated power: 4 W
  - Sampling current: 1 to 100 A
  - Polling interval is 1000 ms
  - Communication protocol: PLC (Power Line Communication)
- Environmental Conditions
  - Indoor use
  - Altitude: 0 - 2000 m *(6561.66 ft)*
  - Relative humidity: 5% to 90%
  - Nominal Temperature: -30 to +50 °C *(-22° F to +122° F)*
  - Overvoltage category: III
  - Pollution degree: 2
  - Insulation degree: Reinforced Insulation
- Standards
  - EN 61010-1: 2010, EN 61326-1: 2013

3.2 Storage

- Ensure that Anti-tripping module and its accessories are stored indoors in a dry and ventilated conditions where the:
  - temperature does not exceed -40 °C to +85 °C *(-40° F to +185° F)*
  - monthly relative humidity does not exceed 90%
  - atmosphere is free of corrosive and explosive gases

3.3 Operation

- The Anti-Tripping Module's housing should be kept sealed to prevent water ingress.
- Failure to comply with the instructions contained within this manual may result in potential safety hazards and/or the failure of safety devices.
- While this manual provides certain guidelines, users should also comply with local safety regulations and accident prevention provisions.
- Due to technical or legal restrictions, it is not possible to supply all accessories to all countries and regions.

3.4 Environment

- Compliant with RoHS (EU directive 2002/95/EC)
- Compliant with REACH (EU regulation 1907/2006)

4 Wiring

⚠ WARNING

FOLLOW THESE GUIDELINES WHEN WIRING EQUIPEMENT

- Connect the Anti-tripping module to the Distribution Board using wires with a diameter equal to or greater than 1.5 mm² *(0.0023 in²)* but **no longer than 30 metres *(1181.09 in)*.**
- Connect the Anti-tripping module to the Distribution Board via the screw terminals N and L1, where L1 is for the Live wire and N is for the Neutral wire (see right-hand diagram below).
- Connect the Anti-tripping module to the Current sensor using wires with a diameter equal to or greater than 1.0 mm² *(0.0016 in²)* but **no longer than 10 metres *(393.69 in)*.**

Failure to follow these instructions can result in death, serious injury, or equipment damage.

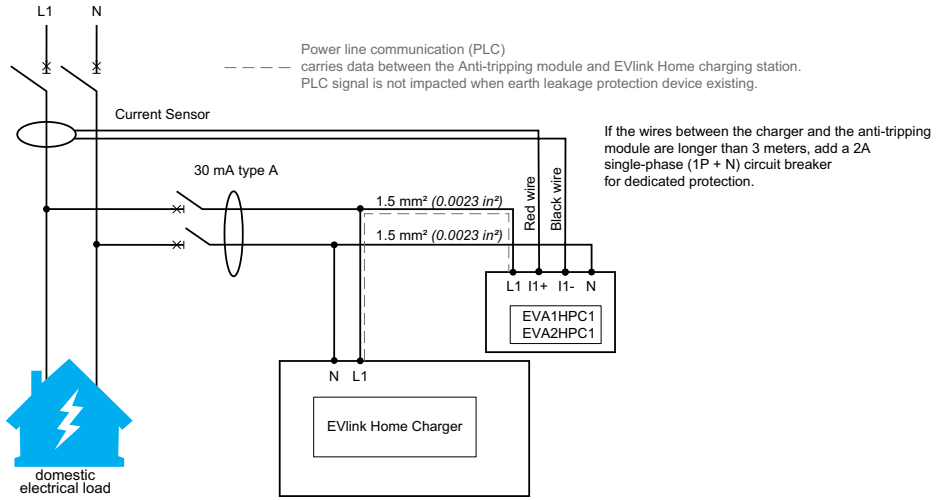

5 Installation

5.1 Installation Anti-tripping module

⚠⚠ DANGER

HAZARD OF ELECTRIC SHOCK, EXPLOSION OR ARC FLASH

- Turn off the electrical power supply before starting work.
- Use a Voltage Tester of appropriate rating.
- Before mounting on the module on a DIN rail, pull the tab at the module's rear to unlock the clip.
- After mounting the module on a DIN rail, push the tab at the module's rear to lock the clip.

Failure to follow these instructions will result in death or serious injury.

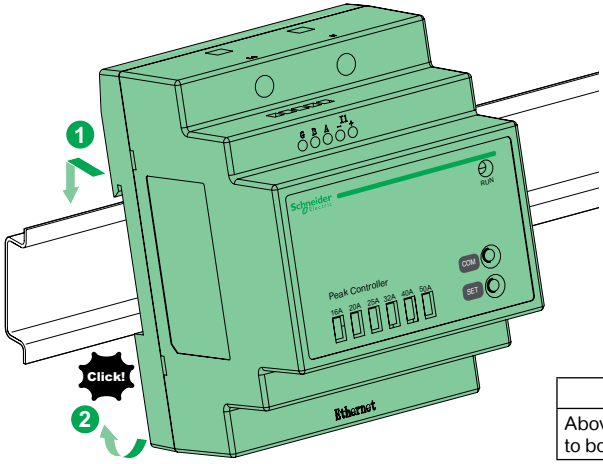

NOTE
Above picture with **EVA1HPC1** as example, it applies to both references **EVA1HPC1** and **EVA2HPC1**.

5.2 Wiring Anti-tripping module

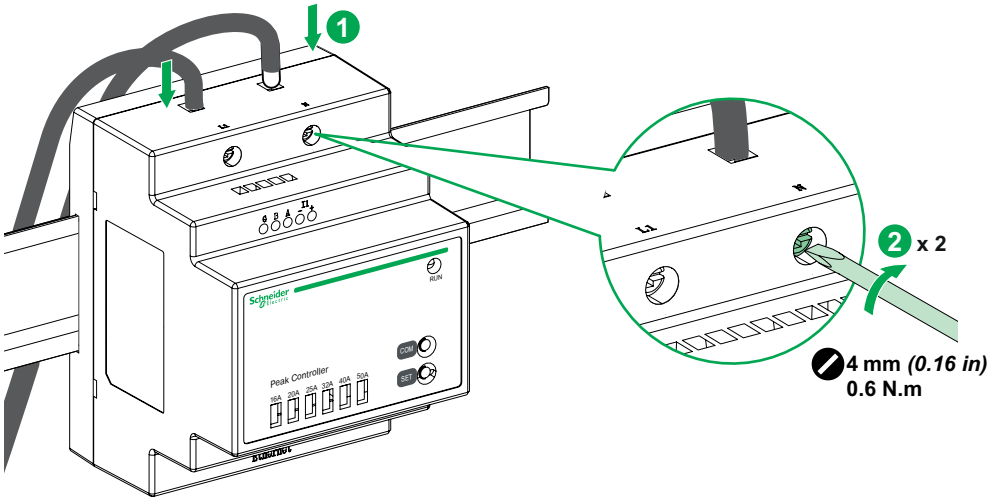

NOTE
Above picture with **EVA1HPC1** as example, it applies to both references **EVA1HPC1** and **EVA2HPC1**.

Wire	Distribution board - EVlink Home charger	EVlink Home charger - Shunt Trip (Mx)	Distribution board - Anti-Tripping Module	Anti-Tripping Module - Current Sensor
Diameter	3 x 6 mm² *(0.0093 in²)*	2 x 1.5 mm² *(0.0023 in²)*	2 x 1.5 mm² *(0.0023 in²)*	2 x 1 mm² *(0.0016 in²)*
Length	< 50 m *(1968.48 in)*	< 30 m *(1181.09 in)*	< 30 m *(1181.09 in)*	< 10 m *(393.69 in)*

5 Installation

⚠ ⚠ DANGER

HAZARD OF ELECTRIC SHOCK, EXPLOSION OR ARC FLASH

- Do not connect or disconnect the current sensor whilst the electrical circuit is powered.
- So, turn off the electrical power supply before connecting or disconnect the current sensor.
- The current sensor can be installed in both directions in an AC installation.
- Do not leave any wires unconnected.

Failure to follow these instructions will result in death or serious injury.

5.3 Installation current sensor

⚠ WARNING

The following points should be followed

Disconnect power supply before connecting or disconnecting current sensor.

Failure to follow these instructions can result in death, serious injury, or equipment damage.

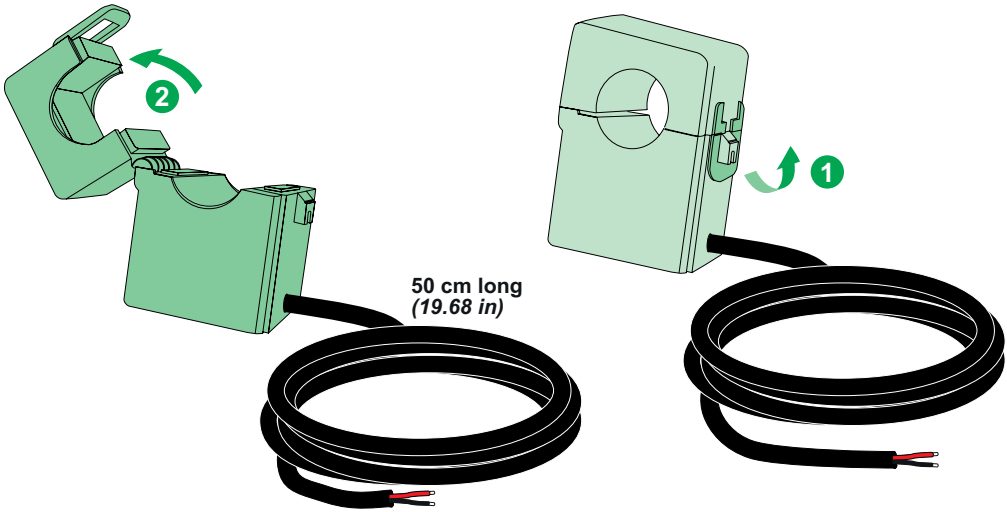

⚠ WARNING

The following points should be followed

Check the phase order of the wiring.

Failure to follow these instructions can result in death, serious injury, or equipment damage.

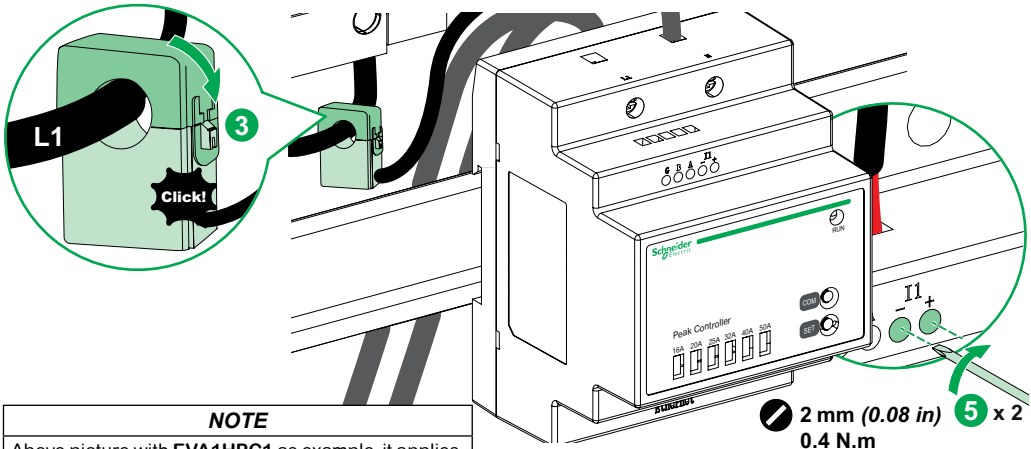

NOTE

Above picture with **EVA1HPC1** as example, it applies to both references **EVA1HPC1** and **EVA2HPC1**.

6 Configure

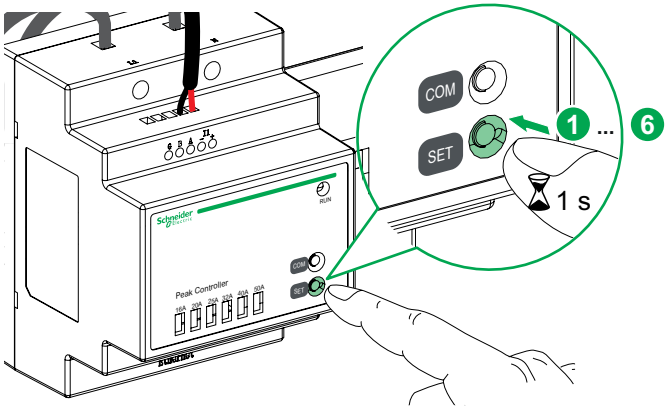

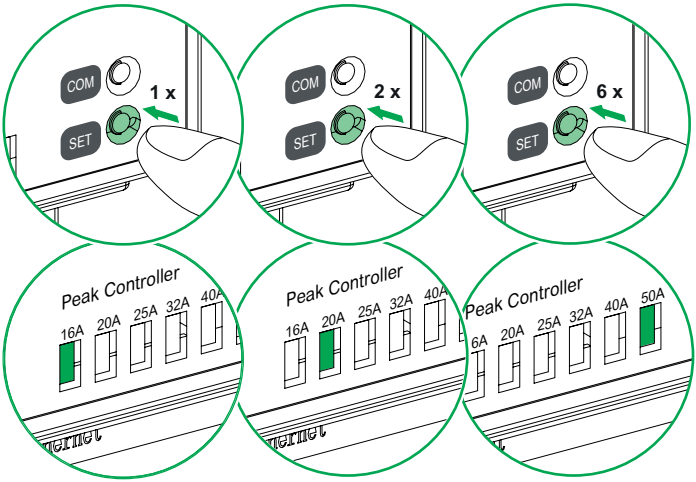

NOTE
Above picture with **EVA1HPC1** as example, it applies to both references **EVA1HPC1** and **EVA2HPC1**.

NOTE
Select the Maximum Current value (**EVA1HPC1**: 16/20/25/32/40/50 A / **EVA2HPC1**: 32/40/50/63/80/100 A) closest and beneath the installation's Current Rating.

NOTE
Restore the electrical power.

7 Troubleshoot

Module's status indicator	Current threshold indicator	Possible causes and corrective measures
OFF	OFF	Power supply is not properly connected, check the wiring.
Blinking green	-	No communication with EV charger: Press <COM> button to enable PLC communication.
Red	**EVA1HPC1** 16A LED is green **EVA2HPC1** 32A LED is green	The current draw exceeded **1.5 times** the Maximum Current threshold selected by the user on the module. Check if the Maximum Current threshold can be increased to just beneath or equal to the Current Rating of the home's electrical installation (see Section 6).
Red	**EVA1HPC1** 20A LED is green **EVA2HPC1** 40A LED is green	The module has detected that voltage supply is under or over the designed limit. Verify that the installation's electrical distribution is within 187-253 V AC.

8 Recycle

The packaging materials from this equipment can be recycled.
The product and all accessories marked with this symbol are electrical and electronic components that must be disposed of separately from household waste.
Please help protect the environment by disposing waste in appropriate containers.
Thank you for helping to protect the environment.

9 Warranty

Contractual warranty	18 months

Manufacturer
Schneider Electric Industries SAS
35, rue Joseph Monier
CS 30323
F - 92506 Rueil Malmaison Cedex
France
www.se.com

UK Importer
Schneider Electric Limited
Stafford Park 5
Telford, TF3 3BL

United Kingdom